Last revision: 03/26/19

Program 1 #89022RT

Trim for rough-in om021

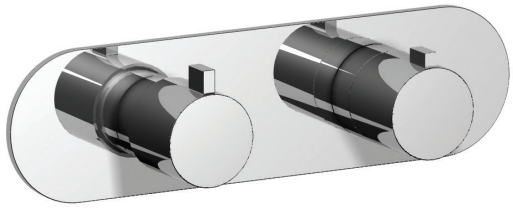

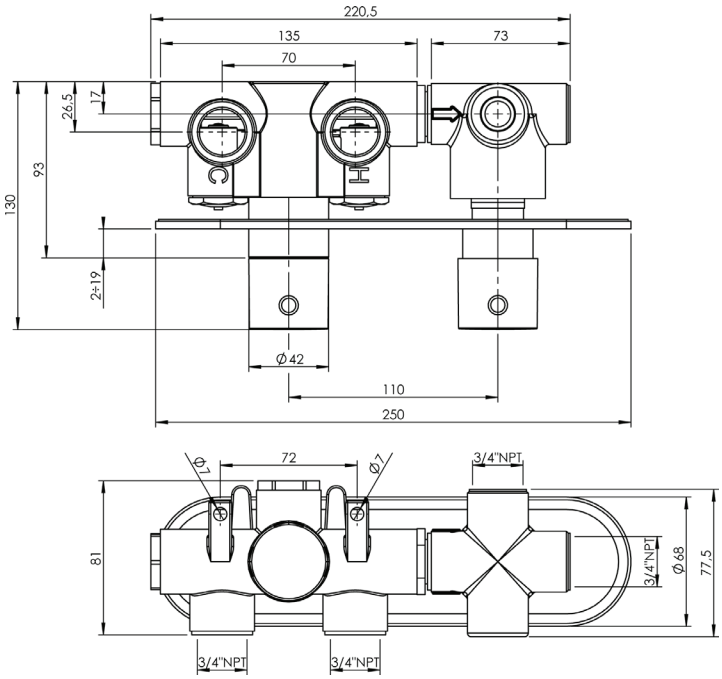

Order om021 rough-in separately
$9^{7/8}$" x $2^{5/8}$"

Finish: Chrome (#99)

Cabano cannot be held responsible for any technical or typographical errors or omissions contained within this document and reserves the right to make changes without prior notice.