KOHLER. Faucets

Tone™ Rite-Temp®

Pressure-balancing shower faucet trim set

K-TS27420-4

Features

- Pressure-balancing diaphragm technology maintains outlet temperature within +/-3°F during water pressure fluctuations.
- Antiscald protection.
- A single handle controls both on/off activation and temperature setting.
- MasterClean™ sprayface features an easy-to-clean surface that withstands mineral buildup.
- Coordinates with other products in the Tone collection.

Material

- Premium material construction with metal handle ensures reliability and durability.
- KOHLER finishes resist corrosion and tarnishing.

Installation

- Requires Rite-Temp® pressure-balancing valve (sold separately).

Required Products/Accessories

K-8304 Series Rite-Temp® Valve & Cartridge Kits

or

K-8300 Series Rite-Temp® Valve Body Rough-ins
K-8305 Series Rite-Temp® Cartridges

Adapters, Rough-in and Extension Kits

10350	Range: 3-1/2" (89 mm) - 4-1/4" (108 mm)

Recommended Products/Accessories

K-23723 Faucet cleaner

Optional Products/Accessories

K-10350 Deep rough-in kit
K-10351 Test cap for K-8300 Series valve bodies
1307346 Retro mixer cap for K-304 Rite-Temp valve
1362395 Retro mixer cap for K-2971 HiFlow Rite-Temp valve

Codes/Standards

ASME A112.18.1/CSA B125.1
DOE - Energy Policy Act 1992

KOHLER® Faucet Lifetime Limited Warranty

See website for detailed warranty information.

KOHLER. Faucets

Tone™ Rite-Temp®

Pressure-balancing shower faucet trim set

K-TS27420-4

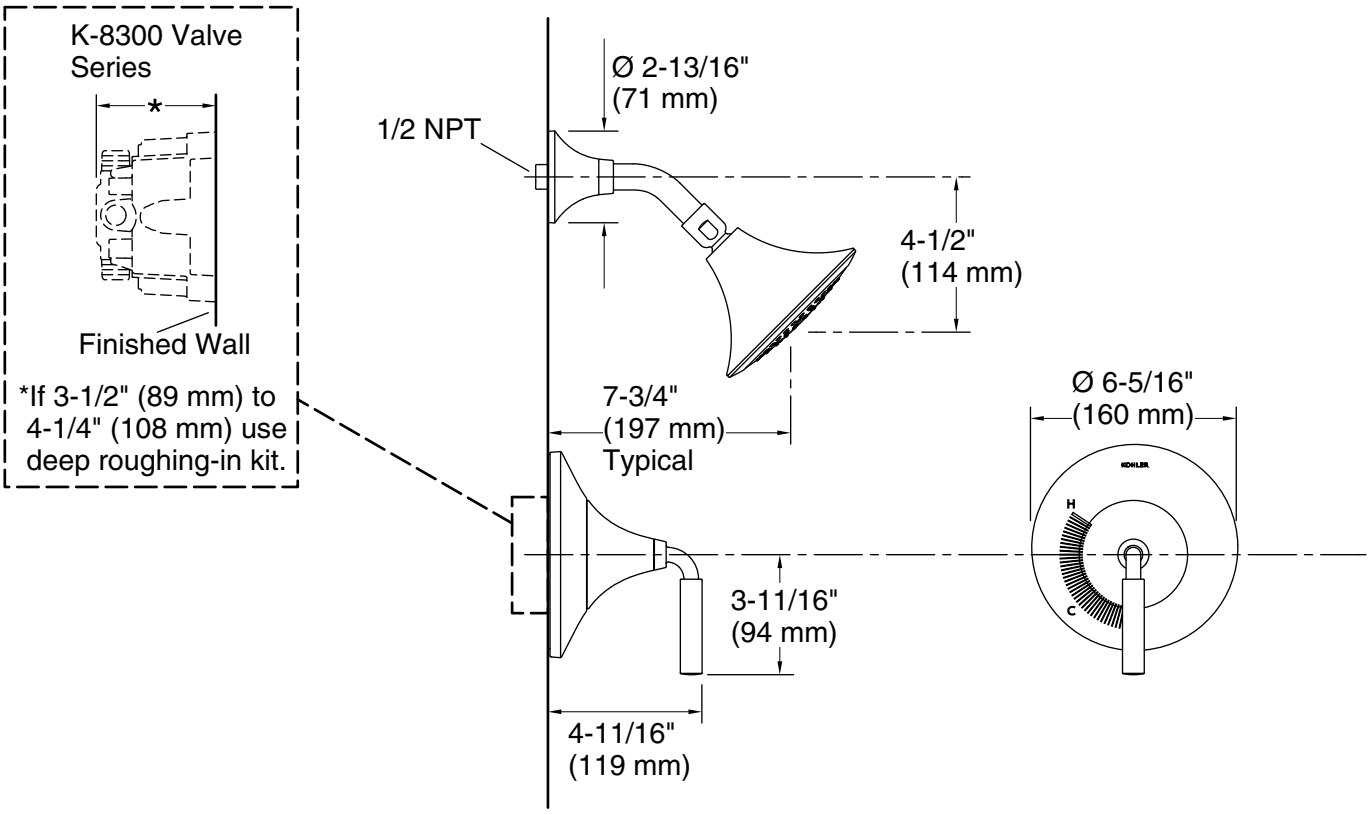

Technical Information

All product dimensions are nominal.

Drain included: No

Showerhead/Body Spray:

Rated maximum flow: 2.5 gal/min (9.5 l/min)

Pressure: 45 psi (3.1 bar)

Notes

Install this product according to the installation instructions.