hansgrohe

Metropol
4-Hole Roman Tub Set Trim with Lever Handles and 1.75 GPM Handshower
Finishes : **brushed black chrome** Part no. : **32557341**

Description

Features

- Consists of: Handshower, 4-Hole Roman tub filler trim
- spray type mixer: Aerated spray
- spray type hand shower: RainAir, Rain, Whirl
- Flow: 6.0 GPM (22.7 L/Min)
- flow rate of hand shower at 3 bar: 1.75 GPM (6.6 L/Min)
- 90° ceramic valves
- Integrated double backflow prevention

Item details

List Price	$ 1,132.00

Technology

Quick Clean

Compliance

WaterSense Meets EPA Criteria Certified by IAPMO R&T

UPC C ®

Product image

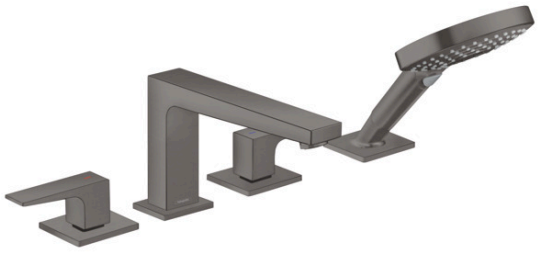
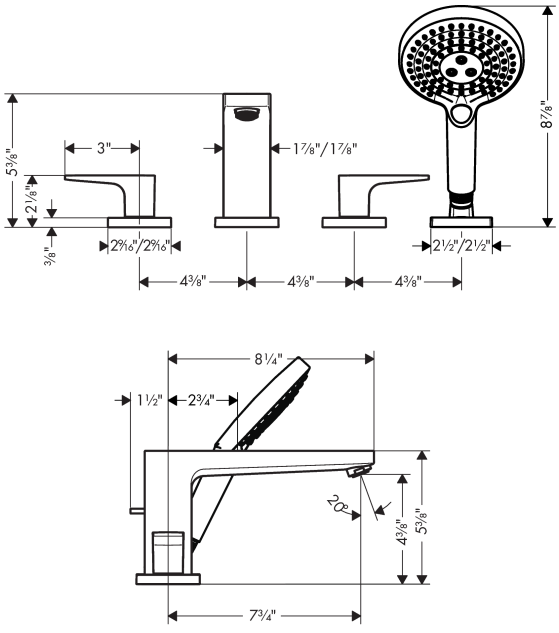
Scale drawing