SPOUT AQ03

Round Spout

Available Finishes
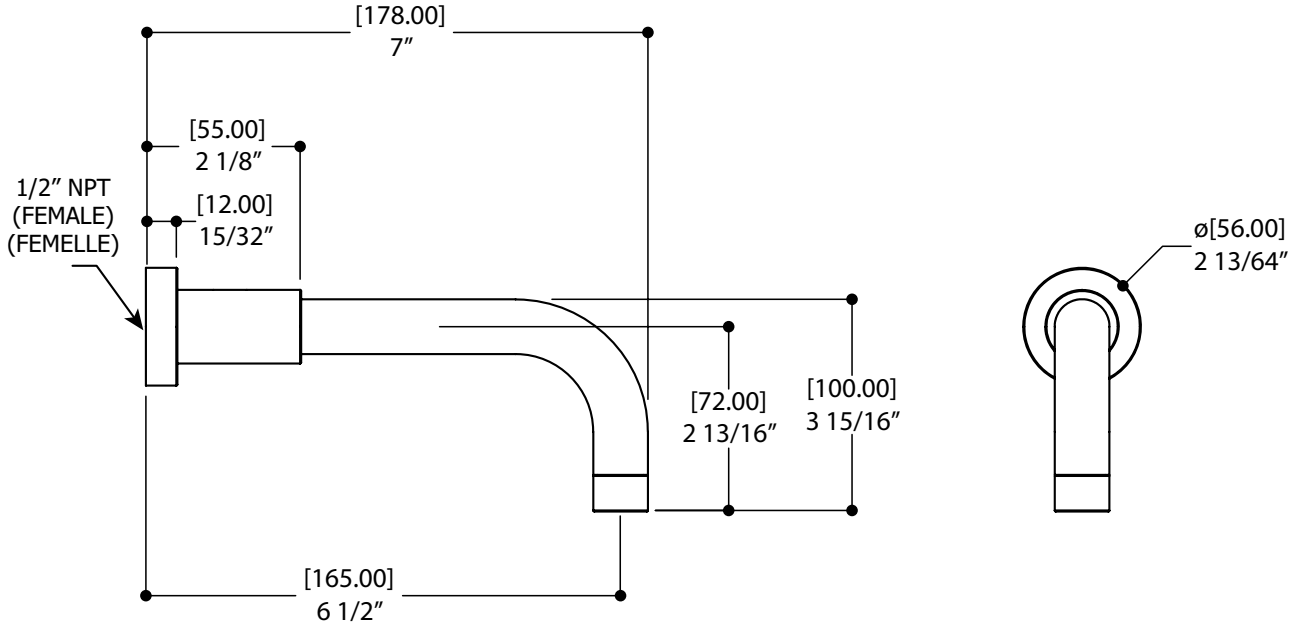
- Chrome
- Brushed Gold
- Brushed Nickel
- Matte Black