CASO 700017

Wallmount Bath

Available Finishes
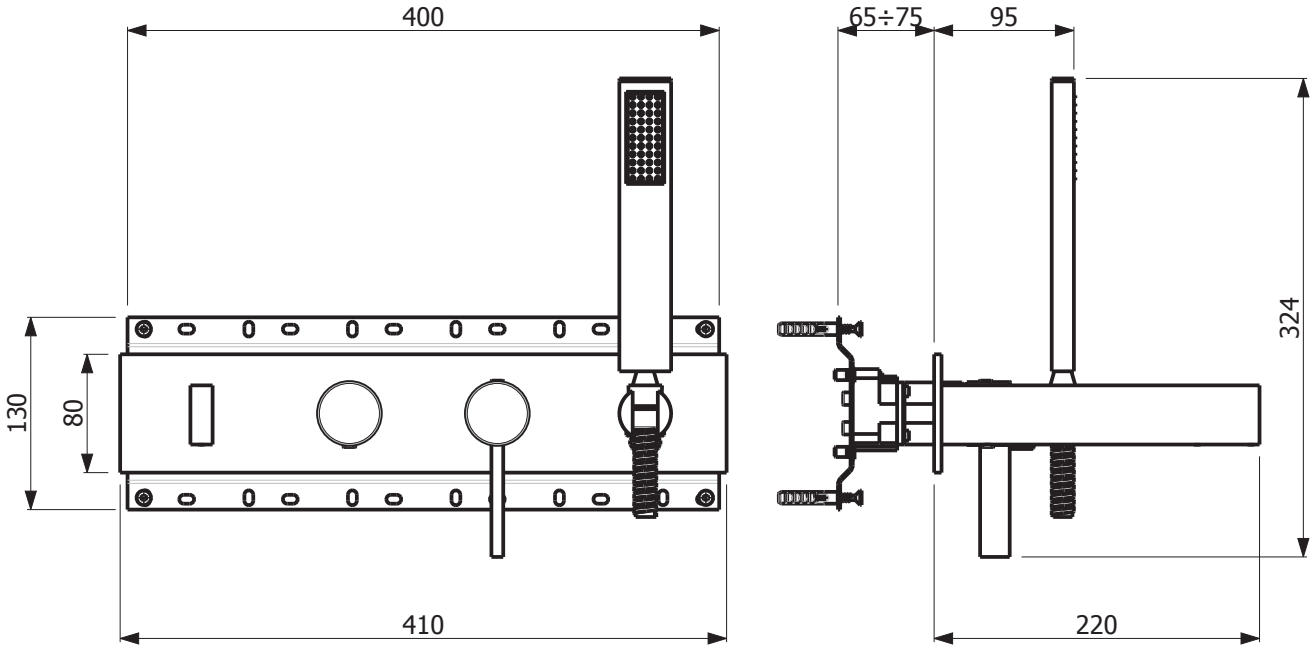
- Chrome
- Brushed Nickel
- Matte Black
- Brushed Gold