ARTIK 72.075M

Widespread Lav

Available Finishes
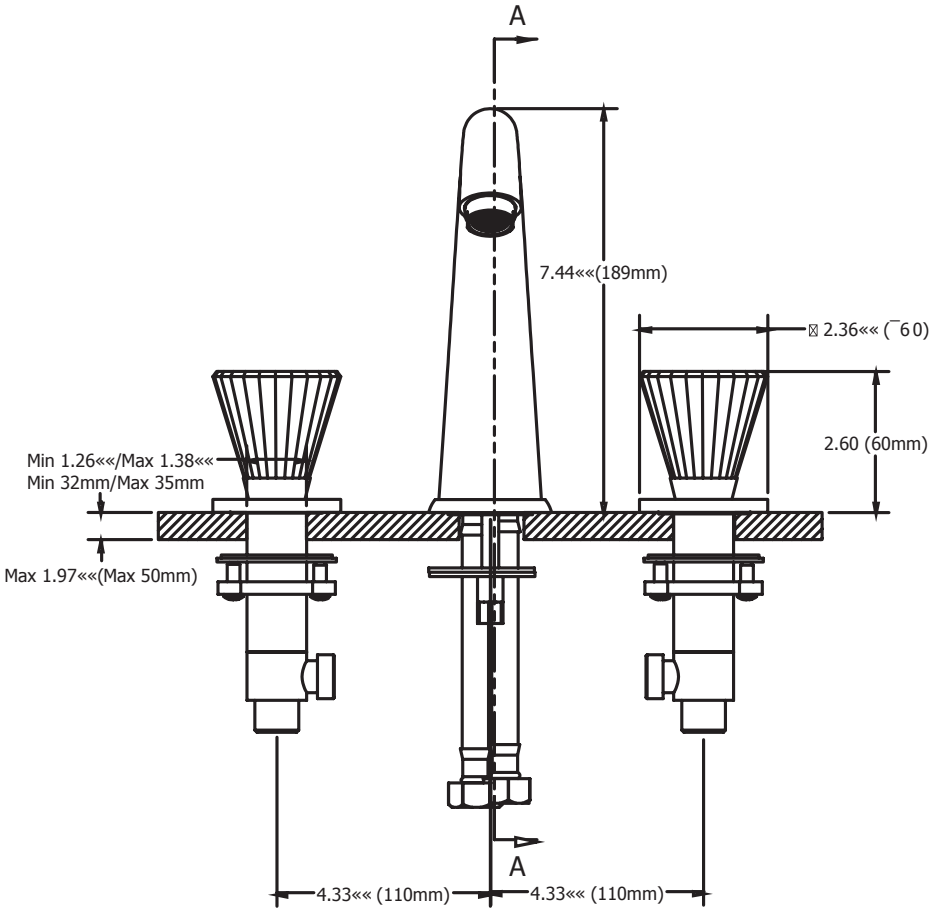
- Chrome
- Gold